# Plain Jane Vinyl Fence

## SPEC DRAWINGS

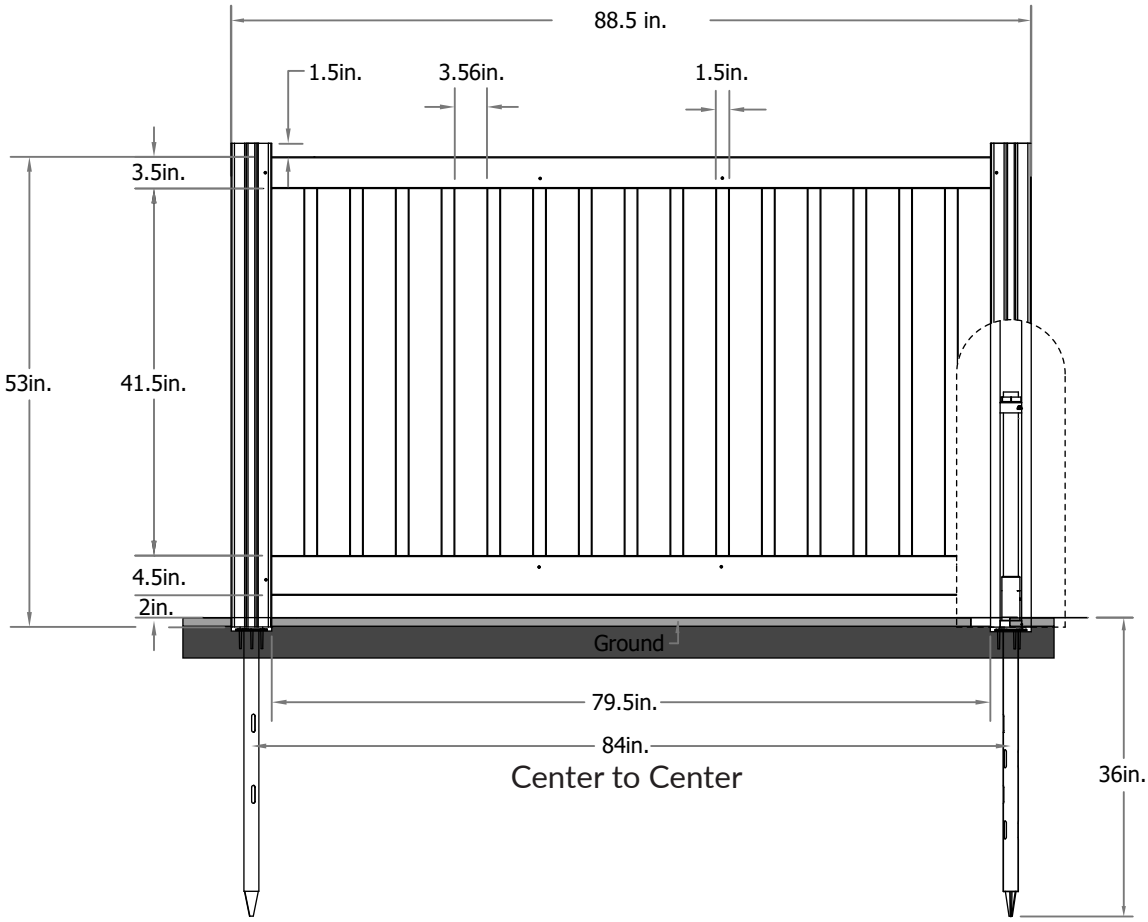


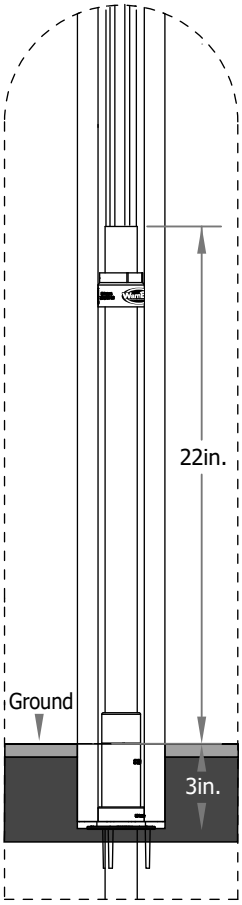


WamBam Anchor
*(Small)*

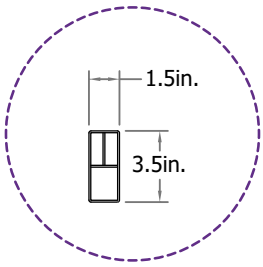


**Top Rail**

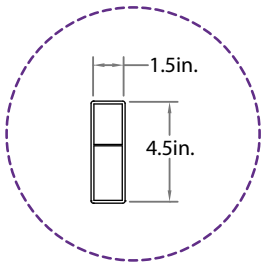


**Bottom Rail**

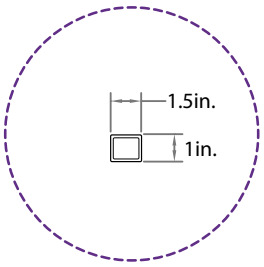


**Picket**

**Please adhere to the above dimensions if installing around a pool to be ICC code compliant.*

WamBam
Fun Name. Serious Fence.